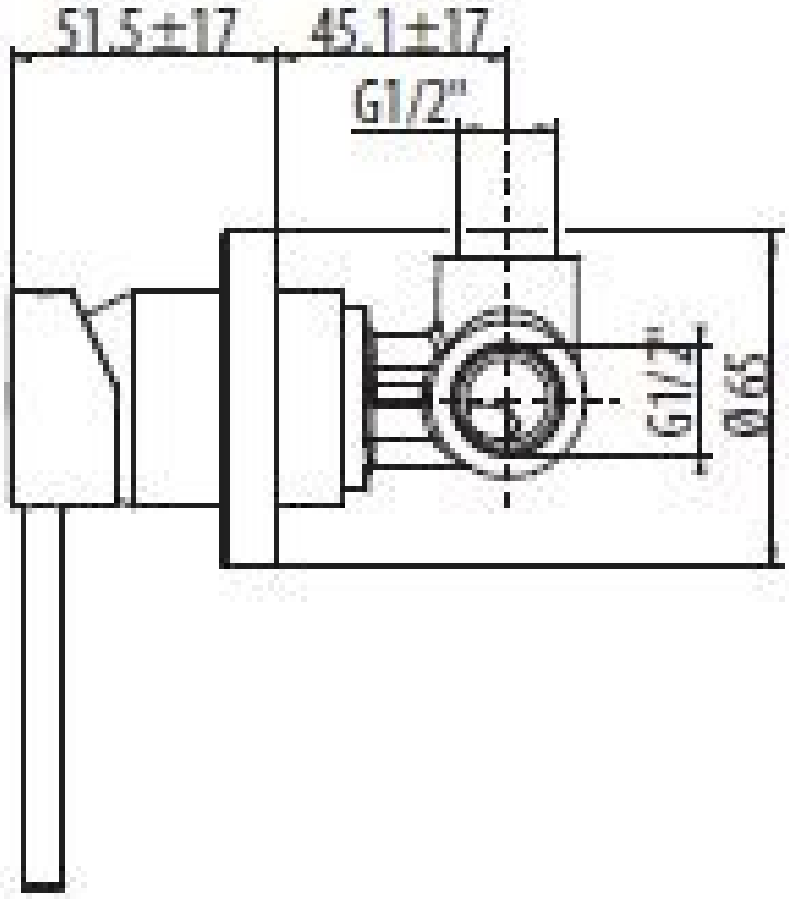
51.5±17
45.1±17
G1/2"
G1/4"
Ø65

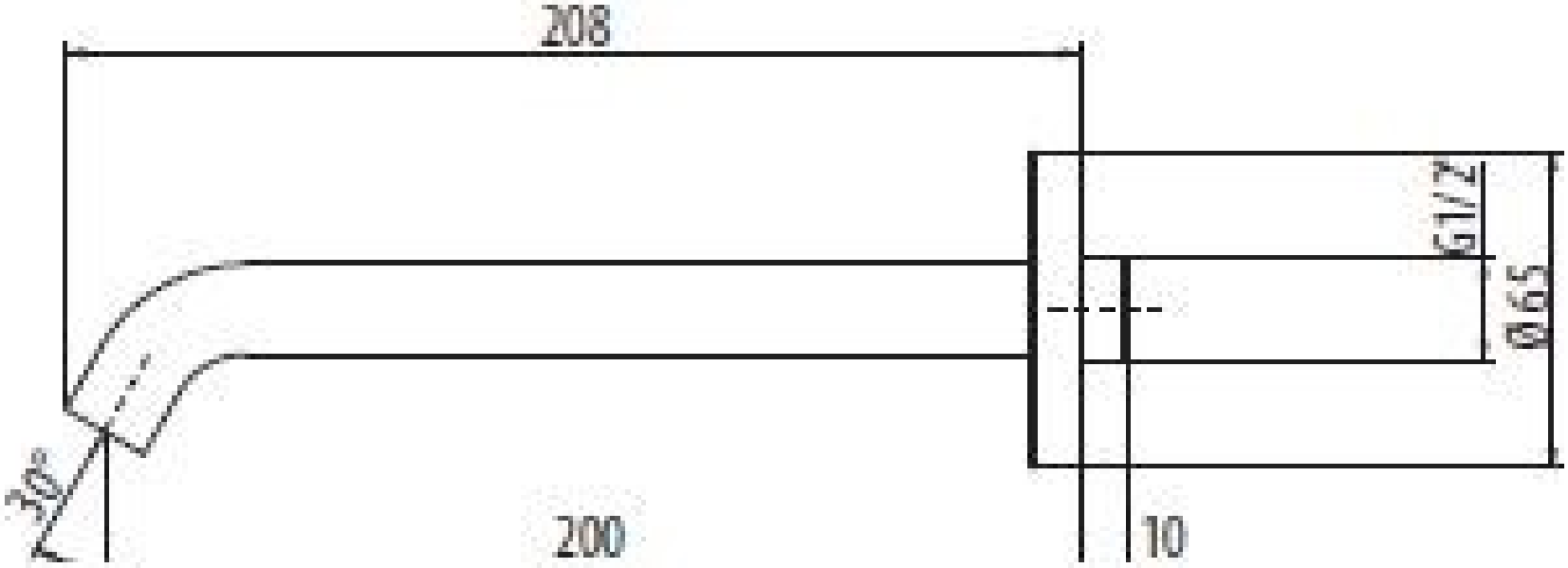
208
G1/2
Ø65
30°
200
10